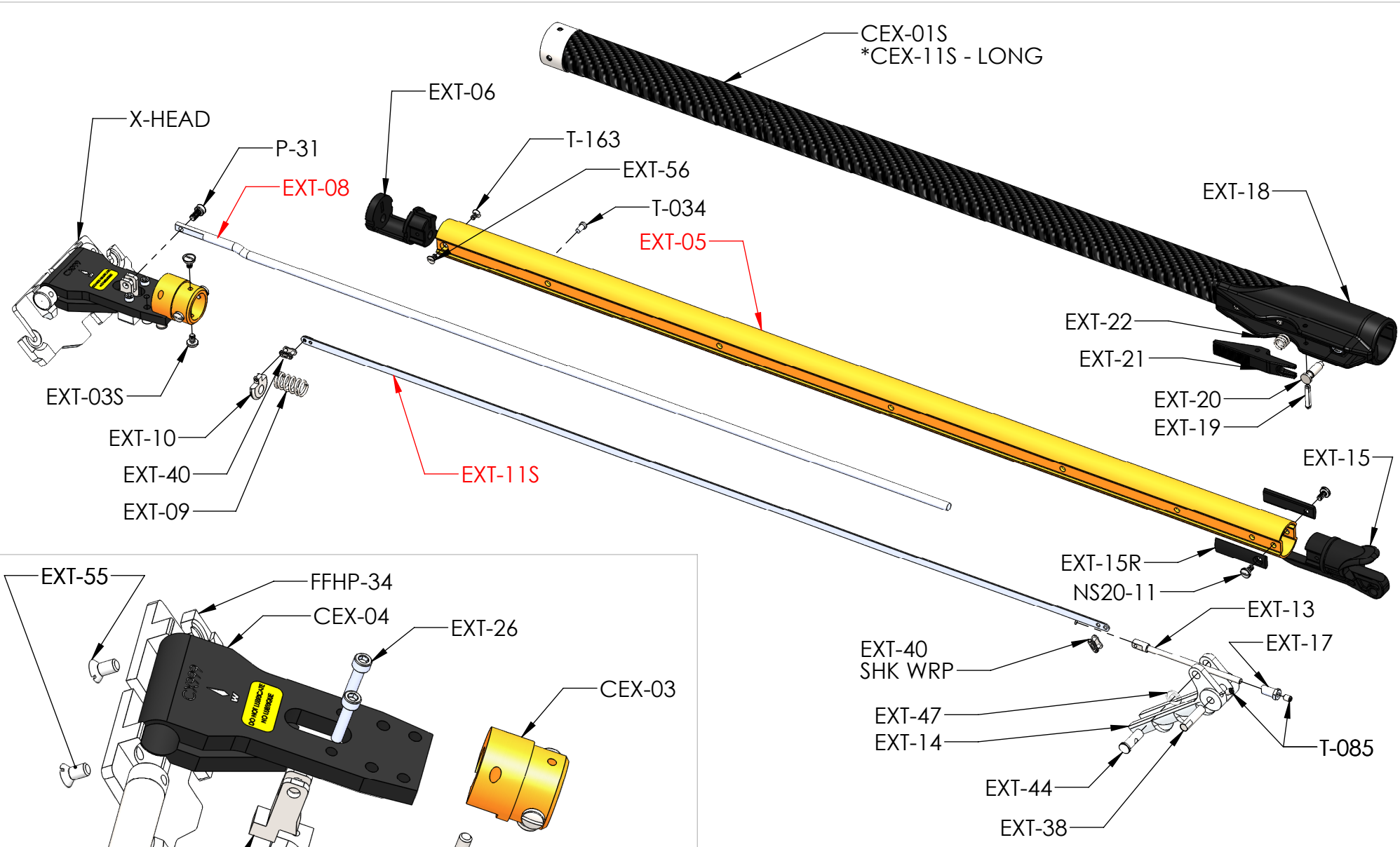

X-HEAD DETAIL

NOTE: PARTS IN RED, SEE TABLE ON PG 2 OF X-DMFH SCHEMATIC

CEX-DMR | PG 1/1

DRYWALL MASTER