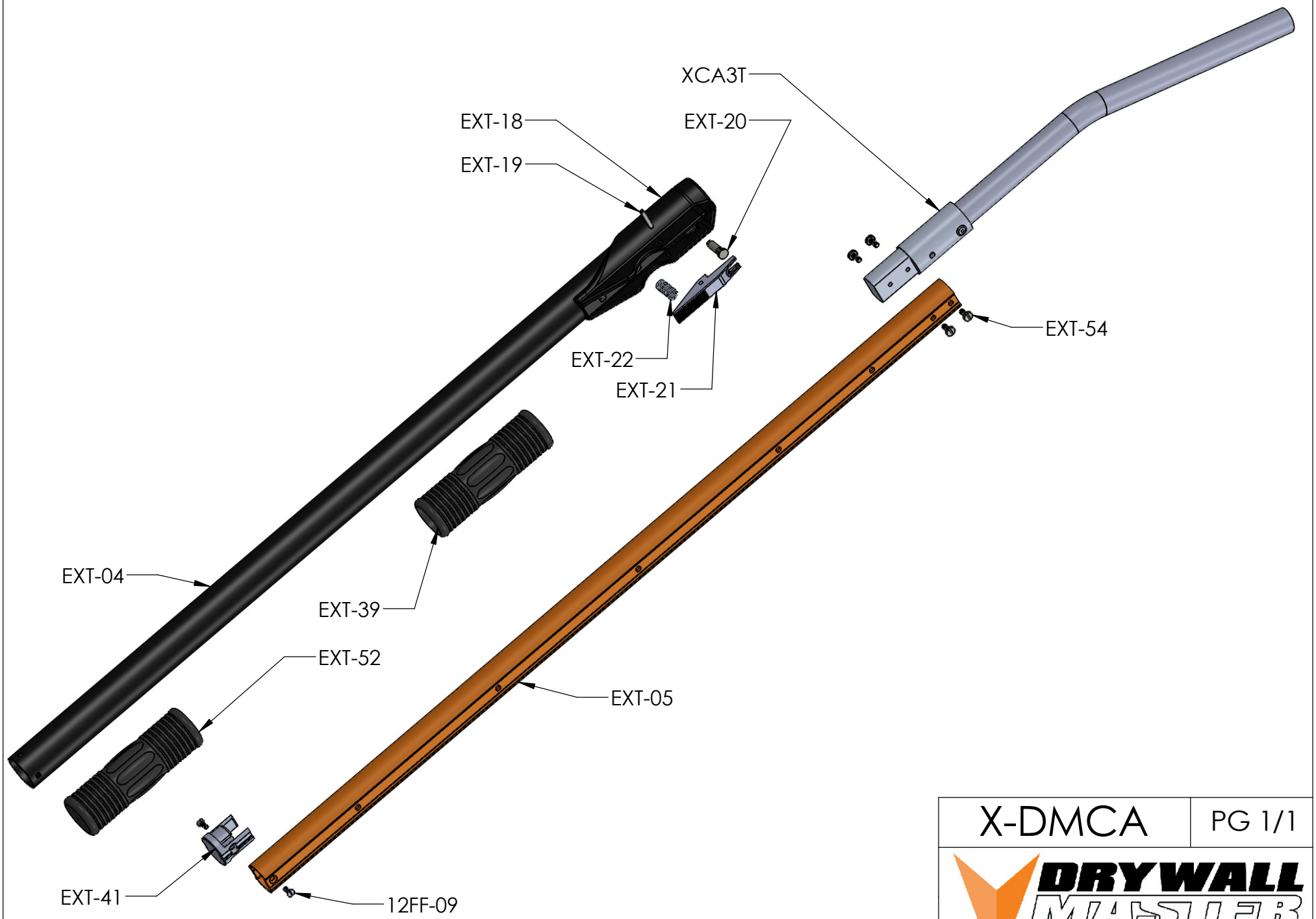

X-DMCA

PG 1/1

DRYWALL MASTER