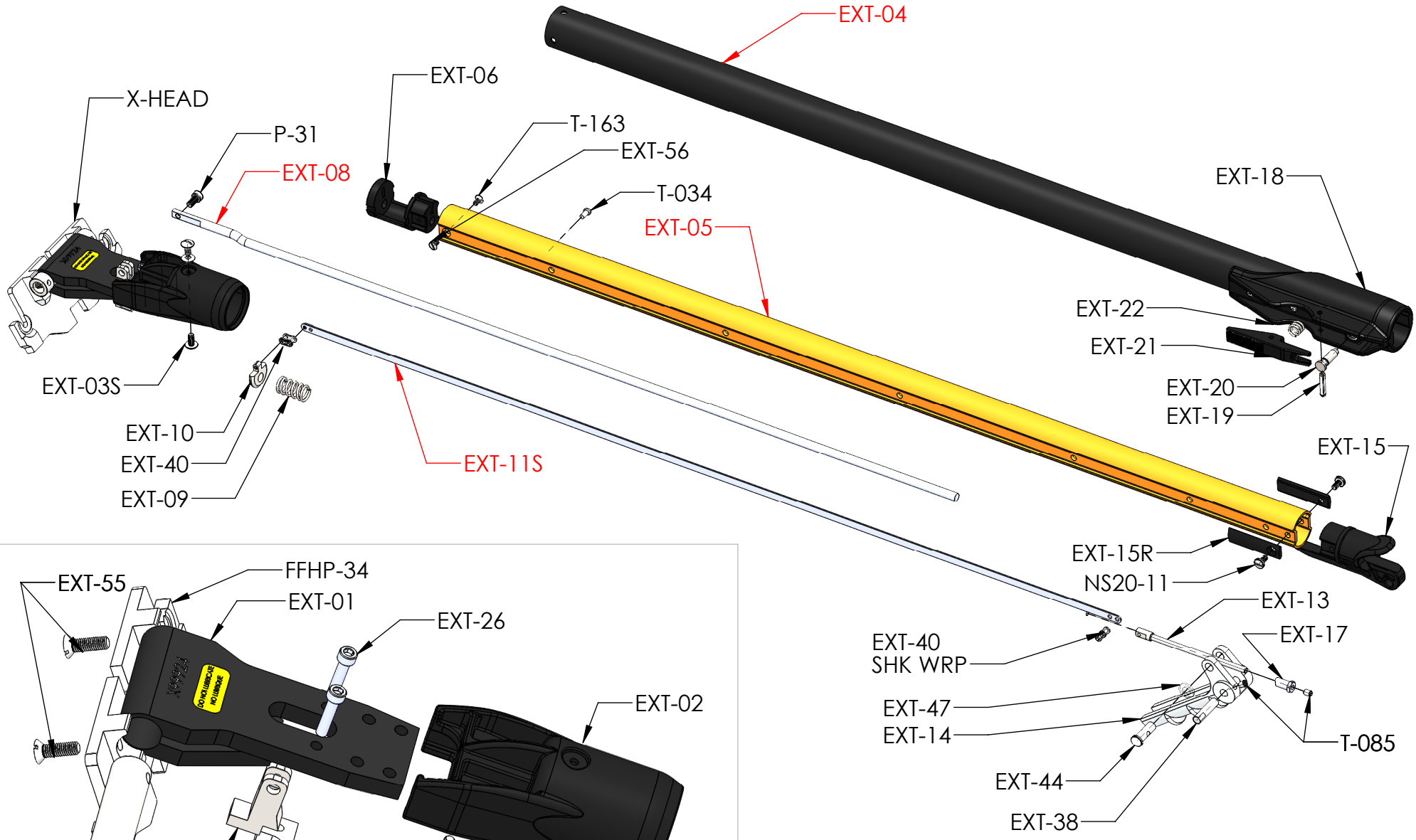

X-HEAD DETAIL

NOTE: PARTS IN RED, SEE TABLE ON PG 2, FOR LONG AND SHORT HANDLES

X-DMFH

PG 1/2

DRYWALL MASTER

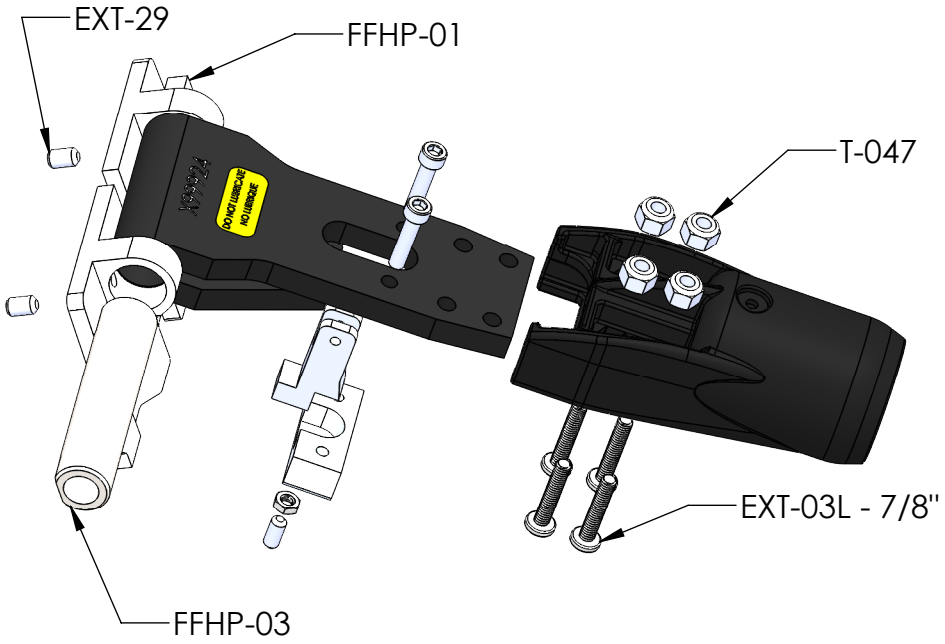

X-HEAD DETAIL - LEGACY

HANDLE SIZE	LENGTH	EXTRUSION	MAIN TUBE (BLACK)	PULL ROD	BAND
SHORT	23" TO 32"	XS-05	XS-04	XS-81S	XS-11S
STANDARD	38" TO 60"	EXT-05	EXT-04	EXT-08	EXT-11S
LONG	47" TO 72"	XL-05	XL-04	XL-81S	XL-11S

DRYWALL MASTER