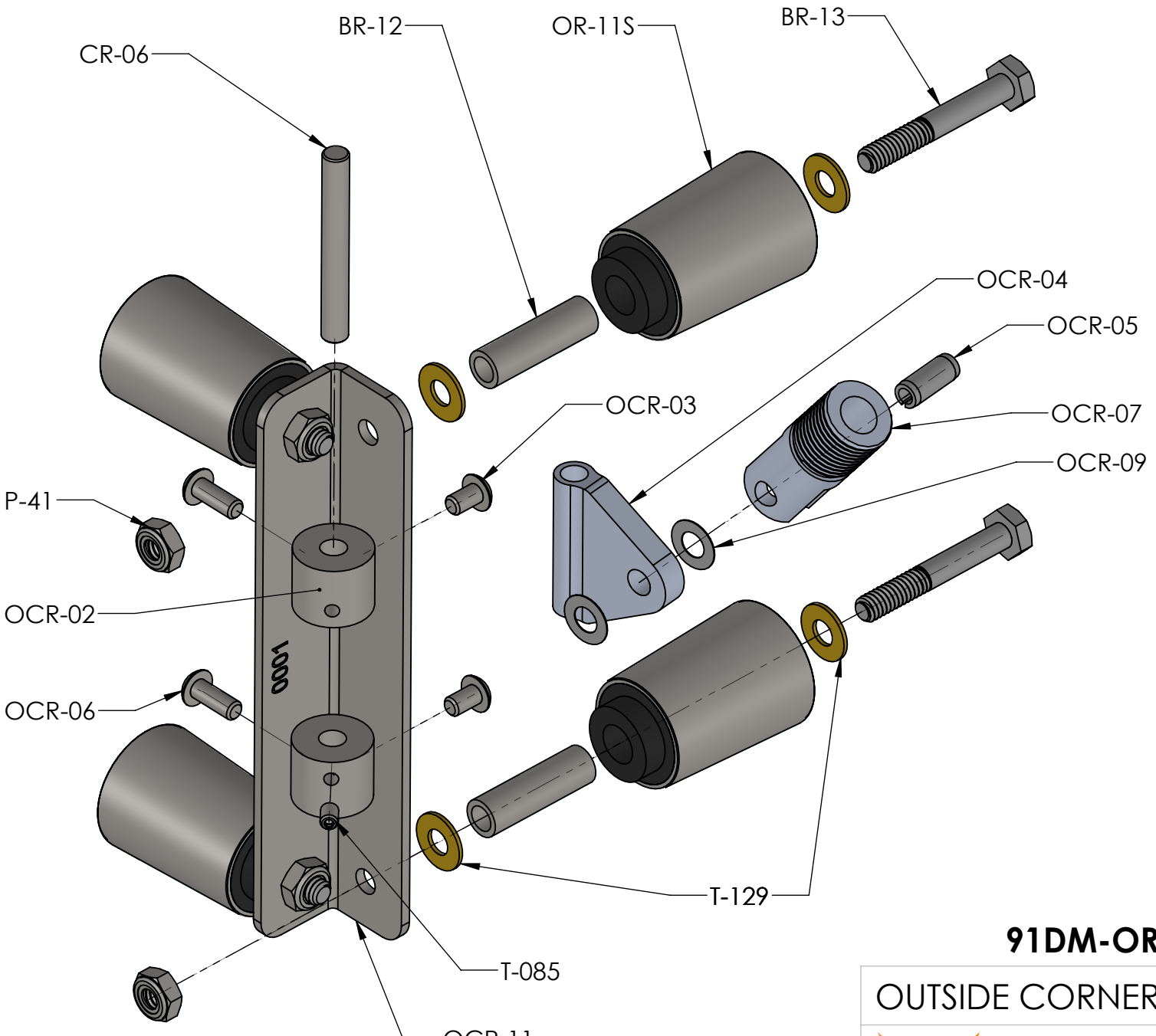

91DM-OR

OUTSIDE CORNER ROLLER

DRYWALL MASTER